HAMBURG INDUSTRIES CO., LTD.

6F., No. 12, Ln. 270, Sec. 3, Beishen Rd., Shenkeng Dist., New Taipei City 222, Taiwan

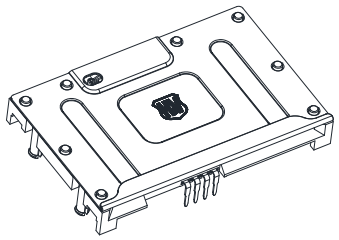

EMV & NDS Compliant
With Heat-dissipation Function

TECHNICAL CHARACTERISTICS

1. General Characteristics
   - Dimensions: 62.00L x 40.00W x 5.65H mm
     62.00L x 40.00W x 8.55H mm
   - Standoff H= 0.00, 3.00 mm
   - Weight: Approx. 10.5 g
   - Contact principle: Friction technology
   - Operating position: Shaft up / Down / Horizontal
   - Mounting System: Thru-Hole with snap-in lock
   - Durability: 100,000 cycles min.

2. Mechanical Characteristics
   - Insulation material: Thermoplastic, UL 94V-0
   - RoHS Directive 2011/65/EU Compliant

3. Electrical Characteristics
   - Number of contacts: 8 pins
   - Contact resistance: 50 mΩ typical, 100 mΩ max.
   - Insulation resistance: >1000 MΩ / 500 VDC
   - Switch type: Blade
   - Operation: Normally Close

4. Solderability
   - Wave: 260°C, 5 sec. Max.
   - IR reflow: Not applicable
   - Manual soldering: 360°C, 3 sec. Max.

5. Environmental Characteristics
   - Operating temperature: - 40°C ~ + 85°C
   - Operating humidity: 10 % ~ 95 % RH
   - Storage temperature: - 40°C ~ + 85°C
   - Storage humidity: 10 % ~ 95 % RH

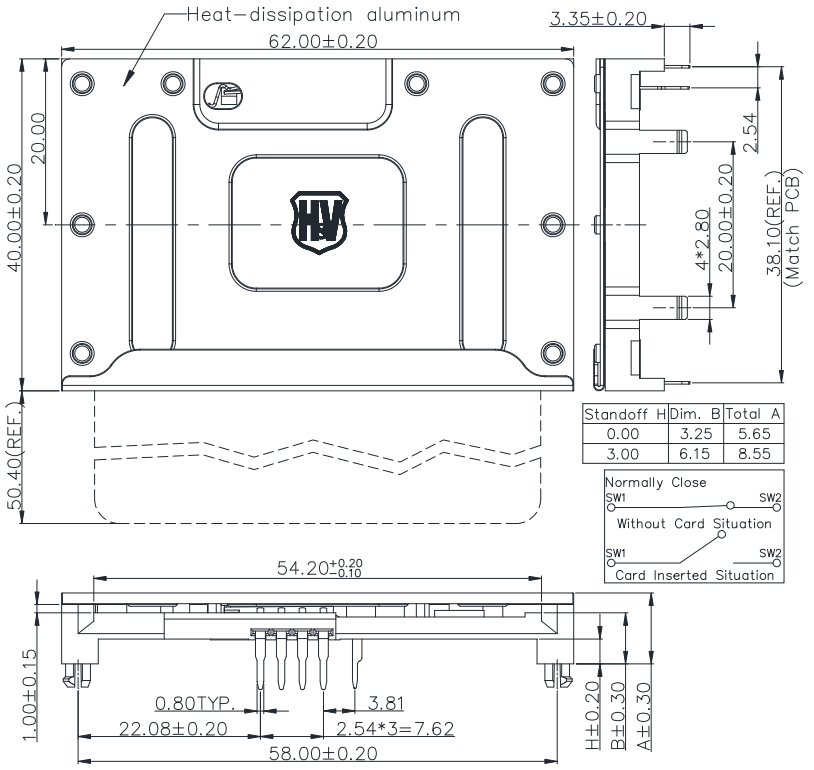

Unit: mm; Tolerances: ±0.15 mm
Mechanical outline dimension

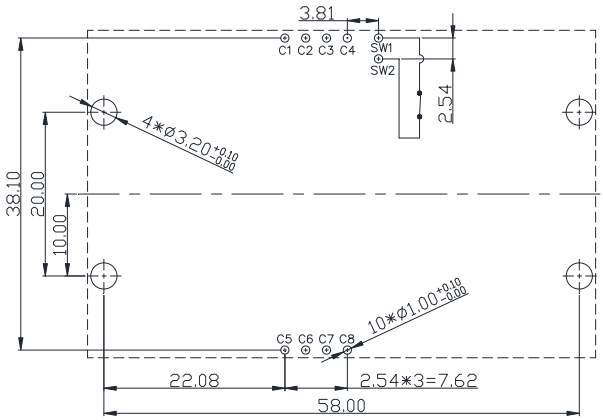

Unit: mm; Tolerances: ±0.05 mm
Reference dimension for PCB layout

H&V Smart Card Acceptor

Model No.: ICA-630

Revision: 1.0 | Date: MAY 01, 2014

For further information, please contact:
Tel: +886 2 2662 8882(Rep.) Fax: +886 2 2662 7201~2 E-mail: taipei@hamburg.com.tw URL: http://www.hamburg.com.tw